Electromagnetic Flowmeter

measuring • monitoring • analyzing

MIS

IO-Link

- Accuracy: <±(0.5% of Reading +0.3% of Full Scale)
- Monitoring, Transmitter Function, and Batching
- Bidirectional Measurement
- p_{max}: 230 PSIG; t_{max}: 158 °F
- Connection: 2", 3", or 4" ANSI Flange

KOBOLD companies worldwide:

ARGENTINA, AUSTRALIA, AUSTRIA, BELGIUM, BULGARIA, CANADA, CHILE, CHINA, COLOMBIA, CZECH REPUBLIC, EGYPT, FRANCE, GERMANY, HUNGARY, INDIA, INDONESIA, ITALY, MALAYSIA, MEXICO, NETHERLANDS, PERU, POLAND, REPUBLIC OF KOREA, ROMANIA, SINGAPORE, SPAIN, SWITZERLAND, TAIWAN, THAILAND, TUNISIA, TURKEY, UNITED KINGDOM, USA, VIETNAM

KOBOLD Instruments, Inc.
1801 Parkway View Drive
Pittsburgh, PA 15205
Main Office:
1.800.998.1020
1.412.788.4890
info@koboldusa.com
www.koboldusa.com

05/12-06-2019

Description

The new MIS electromagnetic flowmeter was developed for measuring and monitoring medium-sized flow of conductive liquids in pipes. The electromagnetic measurement principle is as follows. According to Faraday's Law of magnetic induction, a voltage is induced in a conductor moving through a magnetic field. The electrically conductive measuring agent acts as the moved conductor. The voltage induced in the measuring agent is proportional to the flow velocity and is therefore a value for the volumetric flow. The flowing media must have a minimum conductivity. The induced voltage is picked up by two sensing electrodes which are in contact with the measuring agent and sent to the measuring amplifier. The flow rate is calculated based on the cross sectional area of the pipe.

The measurement does not depend on the process liquid and its properties such as density, viscosity and temperature. The two outputs can be independently set to switch, or provide an analog or frequency output. A batching function can also be selected, where output 1 is set to switch as NPN/PNP/PP and output 2 is set as the control input.

Product Highlights

- Monitoring, Batching and Transmitter Function
- Batching Function has an External Control Input
- Colored, Multi-parameter Configurable TFT-display, Rotatable in 90° Increments
- Bidirectional Measurement
- Intuitive Setup Menu via 4 Optical Touch Keys
- 2 Configurable Outputs (Pulse/Frequency/Alarm and Analog Output)
- Grand and Resettable Totalizer

Common Application Areas

- Water Treatment
- Water Distribution Networks
- Waste Water Treatment
- Filtration Systems
- Industrial Applications

Technical Details

Measurement Process:	Electromagnetic
Range:	See Flow Specific Values
Media:	Conductive Liquids
Minimum Conductivity:	≥ 20 µS/cm
Max. Media Viscosity:	100,000 cP
Max. Pressure:	230 PSIG
Accuracy:	< ± (0.5% of Reading + 0.3% of Full Scale)*
Repeatability:	± 0.2% of Full Scale
Response Time Flow t_{90} (Alarm Output/ Pulse Output):	< 250 ms
Mounting Position:	Universal
Straight Piping Requirement:	5x Upstream, 3x Downstream
Pressure Drop (Max. at 3 m/s):	25 mbar
Programming:	via 4 Optical Touch Fields, Can be used with Gloves
Housing:	Powder-coated Aluminum Body, PMMA Display Screen
Connection:	Steel (ASTM A105), Epoxy-coated (Corrosivity Category C4M)
Wetted Parts	
Lining:	NBR (Others on Request)
Electrodes:	Hastelloy® C276
Protection:	IP 67
Media Temperature:	14…158 °F
Ambient Temperature:	14…140 °F
Electrical Specifications	
Supply Voltage:	19 - 30 V_{DC}, Internal Power Consumption, Max. 200 mA
Display:	TFT Display, 128 x 128 Pixels, 1.4" Display, Orientation Adjustable in 90° Increments
Display Rate:	0.5...10 s, Adjustable
Pulse Output:	Push-Pull, Freely Scalable, Configurable for Partial and Accumulated Totalizer
Frequency Output:	Push-Pull, Freely Scalable, 2 kHz @ Overflow f_{min} @ FS = 50 Hz f_{max} @ FS = 1000 Hz
Alarm Output:	NPN, PNP, Push-Pull, Configurable Max. 30 V_{DC}, Max. 200 mA Short-circuit Proof
Analog Output:	Active, 3 wire, 0(4)-20 mA, Max. Load 500 Ω or 0(2)-10 V_{DC}, (R_i = 500 Ω)
Control Input:	Active Signal U_{high} Max. 30 V_{DC} 0 <Low <10 V_{DC} 15 V_{DC} <High <Vs
Batching Function:	Batching Output OUT2: Push-Pull, High Active Control Input OUT1: START/STOP 0,5 s <t_{high} <4 s RESET t_{high} >5 s
Electrical Conn:	Plug M12x1, 4-pin

* Under Reference Conditions: Media Temperature: 59...86 °F, 1 cSt, 500 µS/cm, 14.5 PSI, Ambient Temperature: 59...86 °F

Flow Specific Values

ANSI Flange	Measuring Range
2"	2...277 GPM
3"	2.65...700 GPM
4"	4.40...1,100 GPM

Configuration of Outputs

Output 1 (OUT1, PIN 4)	Output 2 (OUT2, PIN 2)
Analog Output 4-20 mA	Analog Output 4-20 mA
Analog Output 0-20 mA	Analog Output 0-20 mA
Analog Output 2-10 V	Analog Output 2-10 V
Analog Output 0-10 V	Analog Output 0-10 V
Switching Output NPN/PNP/PP	Switching Output NPN/PNP/PP
Pulse Output PP	Pulse Output PP
Frequency Output PP	Frequency Output PP
Communication Mode M12 COM	
Communication Mode IO-Link	
Control Input	
Control Input Batching Function	Batching Output

IO-Link Specification

Manufacturer ID: 1105 (Decimal), 0 x 0451 (Hex)
Manufacturer Name: Kobold Messring GmbH
IO-Link Specification: V1.1
Bitrate: COM3
Minimal Cycle Time: 1.1 ms
SIO-Mode: Yes (OUT1 in Configuration IO-Link)
Block Parameterization: Yes
Operational Readiness: 10 s
Max. Cable Length: 65 feet

Electrical Connection MIS

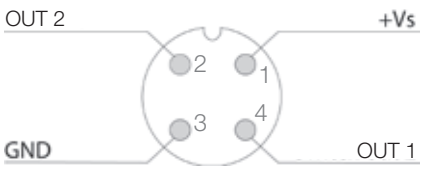

Order Details (Example: **MIS-H 208R 1 HH 100**)

Model	Material Lining[1)]	Flange Type/Size	Material Process Connection	Measuring and Grounding Electrodes[2)]	Transmitter Mounting
MIS-..	**..H..** = Hard Rubber	**..206R..** = 2" ANSI, Class 150 **..208R..** = 3" ANSI, Class 150 **..210R..** = 4" ANSI, Class 150	**..1..** = Steel, Epoxy-coated	**..HH..** = Hastelloy®	**..100** = Integrated
Accessories:	**P/N 807.037** = 4-Pin Micro-DC Connector with 6-foot Cable **P/N 807.037/5M** = 4-Pin Micro-DC Connector with 16-foot Cable **P/N 807.037/10M** = 4-Pin Micro-DC Connector with 32-foot Cable				

[1)] Possible linings available upon request: EPDM, soft rubber ,and PTFE
[2)] Possible electrodes available upon request: platinum, stainless steel, tantalum, and titanium

Dimensions

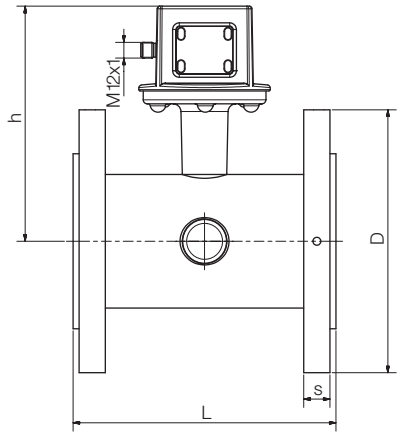

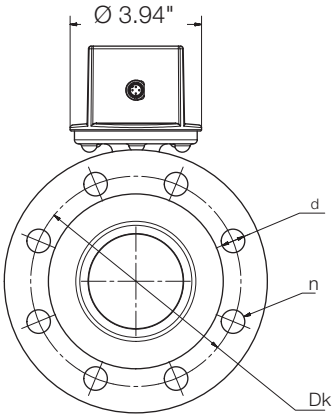

Flange	Nominal Diameter	h	L	D	s	Dk	d	n
ANSI 150 lb	2"	6.23"	7.87"	6.0"	0.75"	4.75"	0.75"	0.157"
	3"	6.98"	7.87"	7.5"	1.02"	6.00"	0.75"	0.157"
	4"	7.29"	9.84"	9.06"	1.06"	7.50"	0.75"	0.315"

Weight

ANSI Flange	Pressure Rating	Weight
2"	Cl. 150	21.5 lbs
3"	Cl. 150	26.5 lbs
4"	Cl. 150	34.4 lbs

Measuring Mode, Display Layout "Single" Configurable

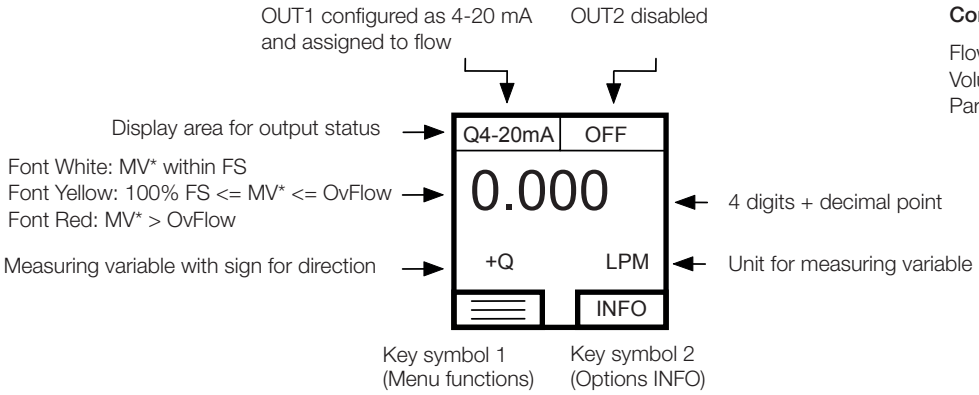

Configurable Variables

Flow Rate	Q
Volume	AC
Part Volume	PT

* Measured Value

Measuring Mode, Display Layout "Dual" Configurable

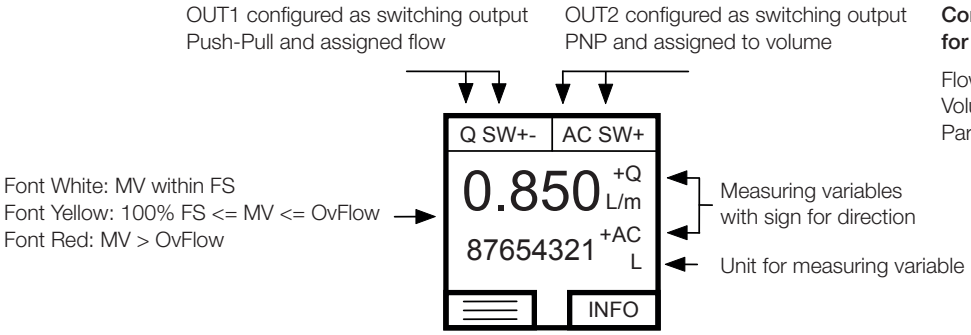

Configurable Variables for Both Displays

Flow Rate	Q
Volume	AC
Part Volume	PT